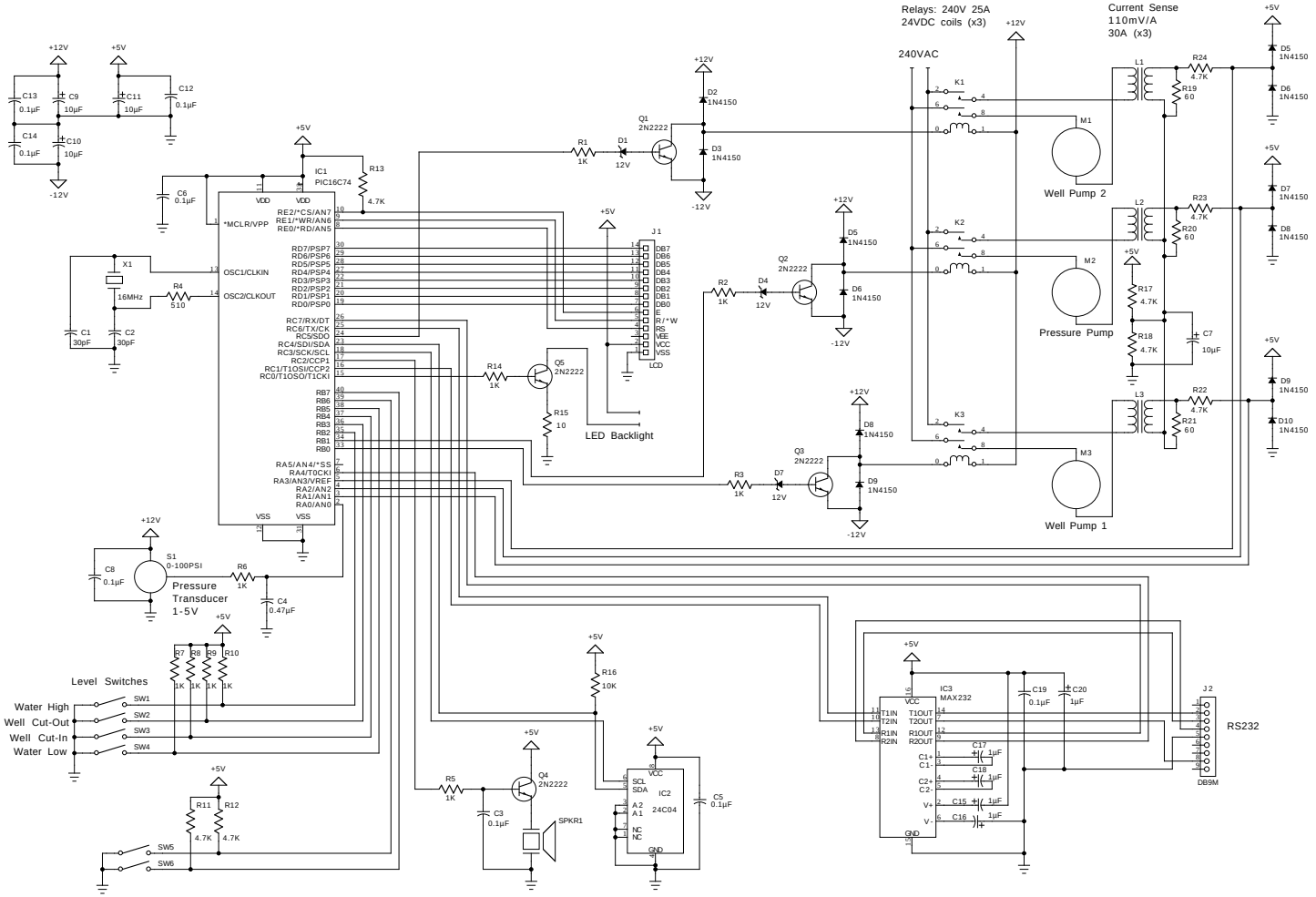

Water System Controller
Copyright © 1996 Allan N. Hessenflow